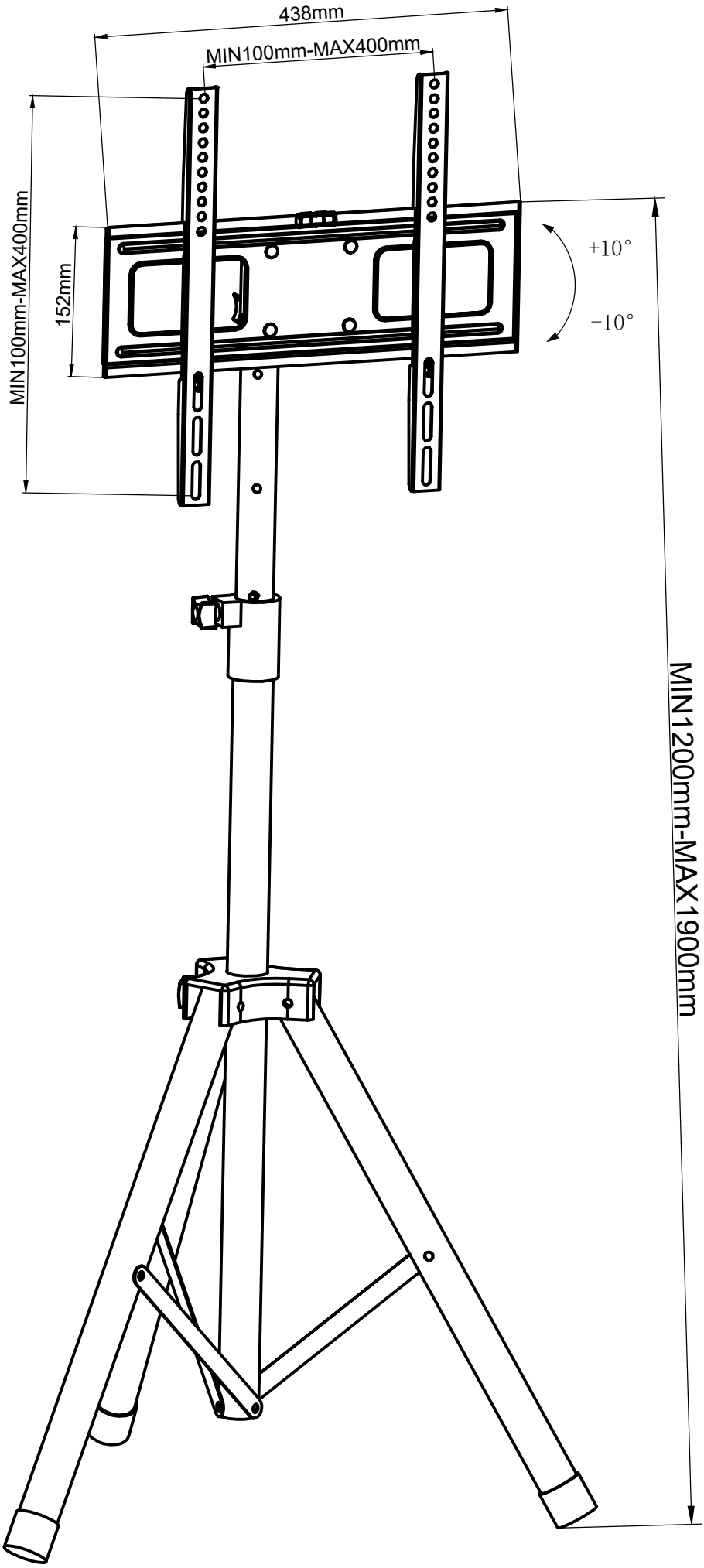
438mm
MIN100mm-MAX400mm
MIN100mm-MAX400mm
152mm
+10°
−10°
MIN1200mm-MAX1900mm