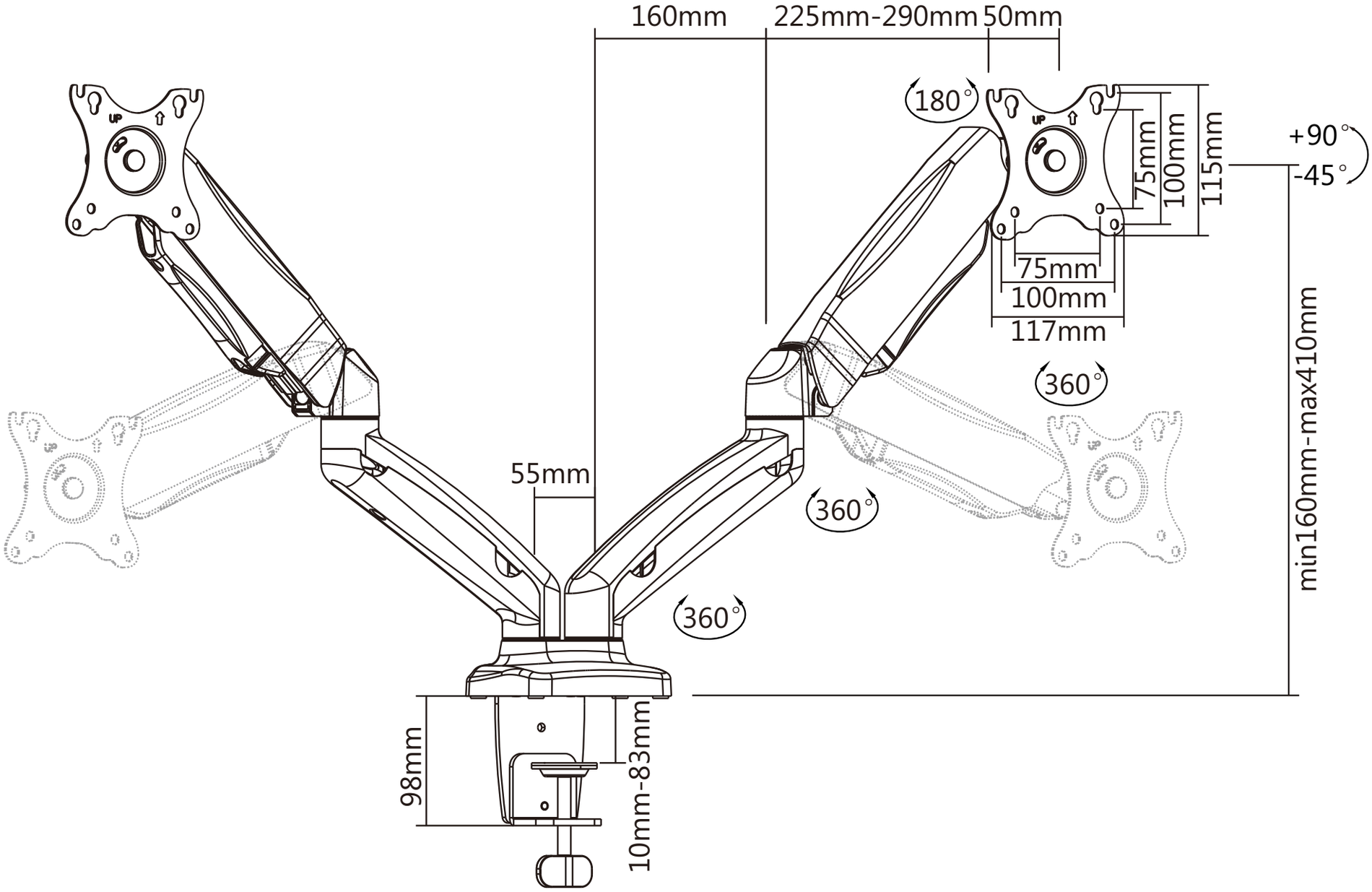
160mm
225mm-290mm
50mm
180°
+90°
-45°
75mm
100mm
115mm
75mm
100mm
117mm
360°
360°
360°
55mm
min160mm-max410mm
98mm
10mm-83mm