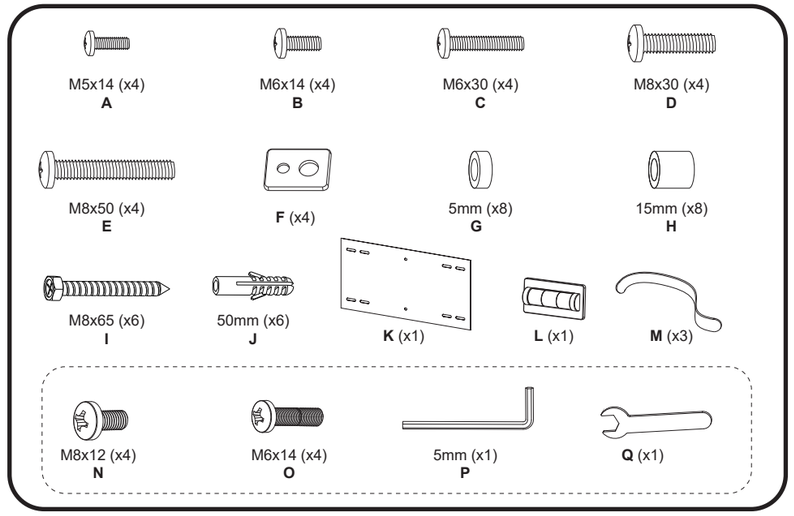
M5x14 (x4)
A
M6x14 (x4)
B
M6x30 (x4)
C
M8x30 (x4)
D
M8x50 (x4)
E
F (x4)
5mm (x8)
G
15mm (x8)
H
M8x65 (x6)
I
50mm (x6)
J
K (x1)
L (x1)
M (x3)
M8x12 (x4)
N
M6x14 (x4)
O
5mm (x1)
P
Q (x1)

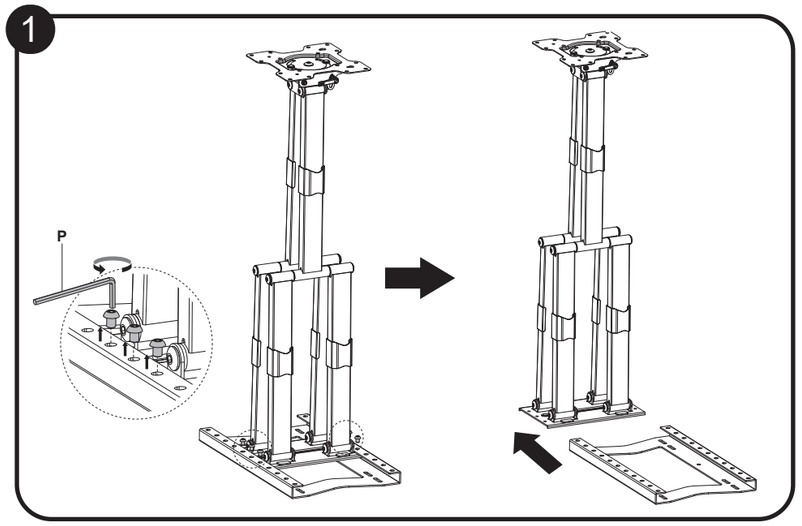
1
P
I
I
I

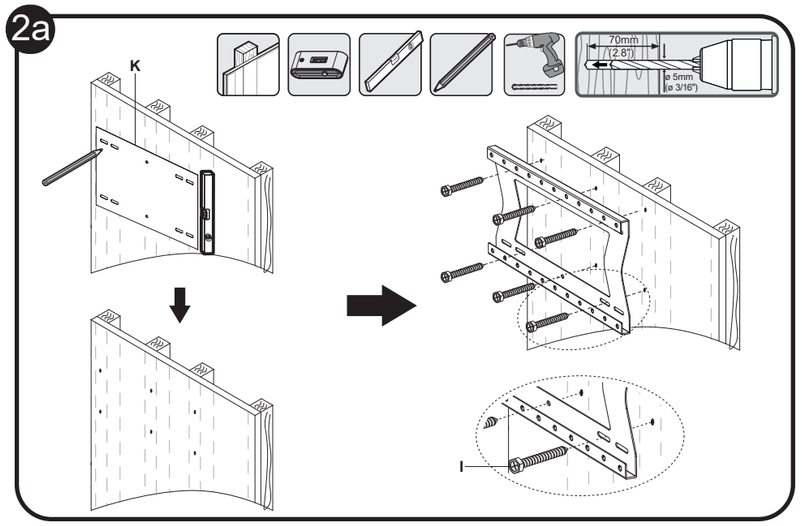
2a
K
70mm
(2.8")
ø 5mm
(ø 3/16")
I

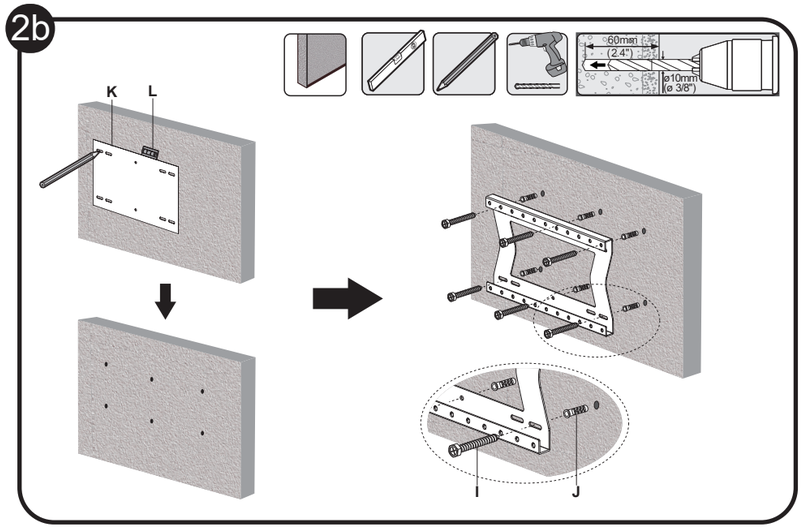
2b
K
L
60mm
(2.4")
ø10mm
(ø 3/8")
I
J

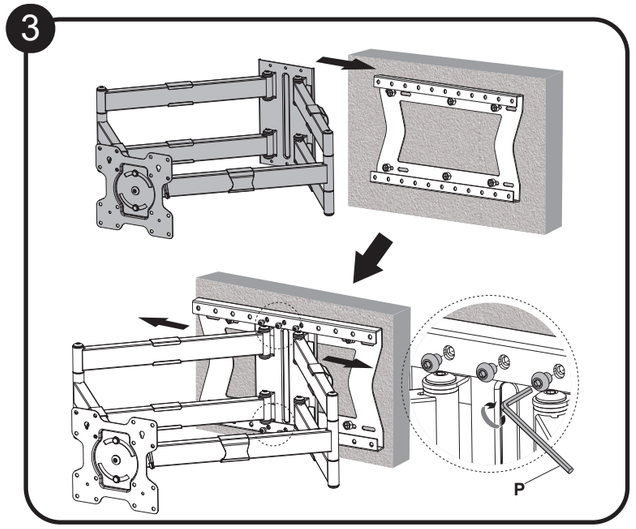
3
P

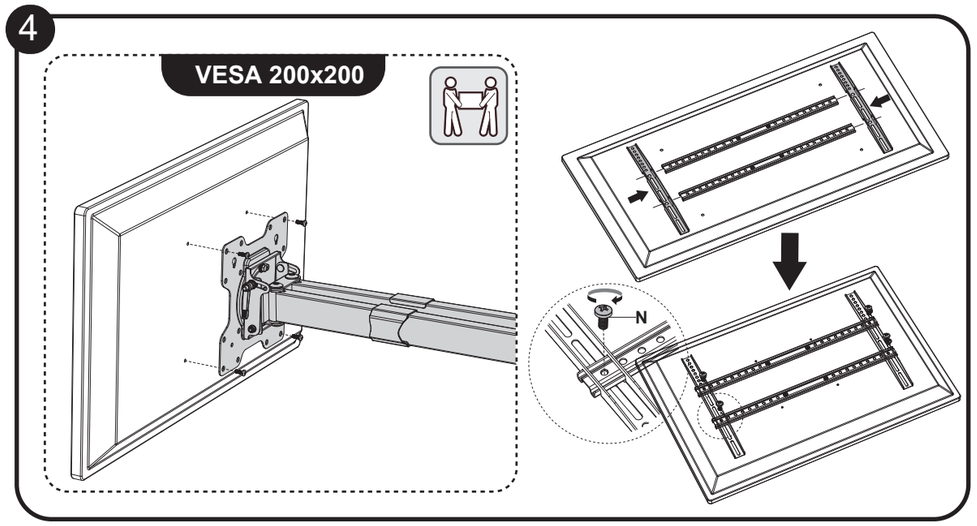
4
VESA 200x200
N

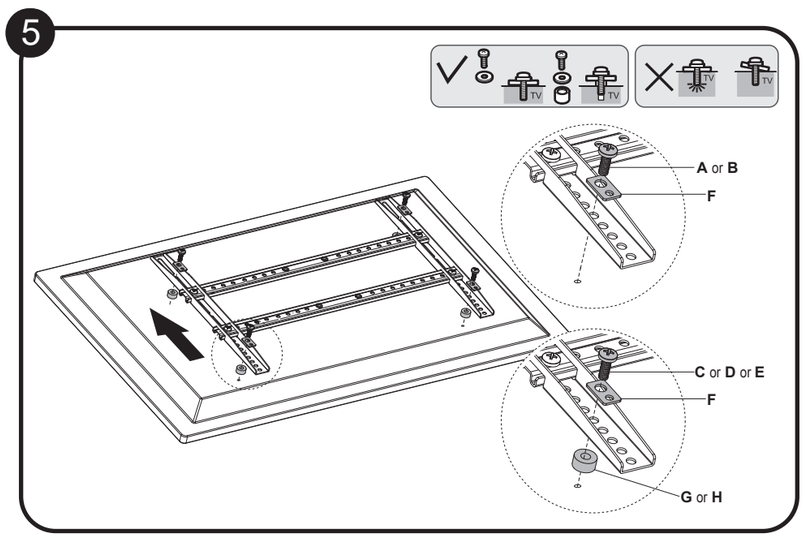
5
TV
TV
TV
TV
A or B
F
C or D or E
F
G or H

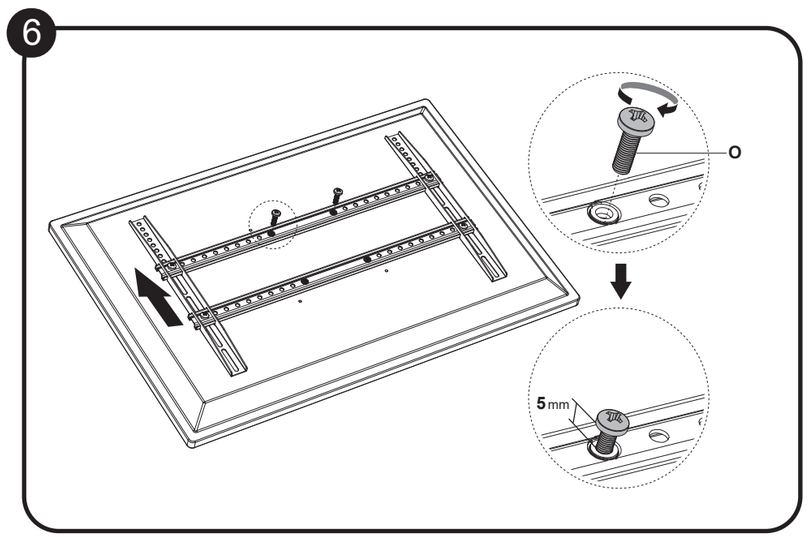
6
O
5mm

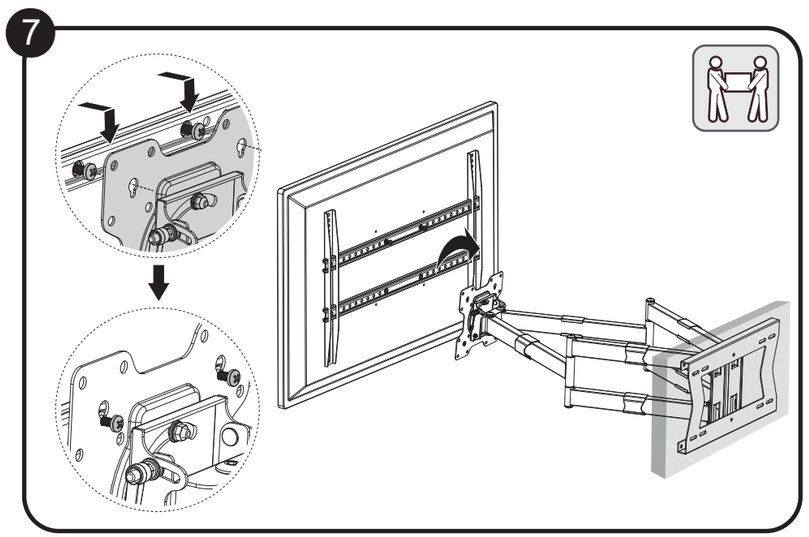
7

8

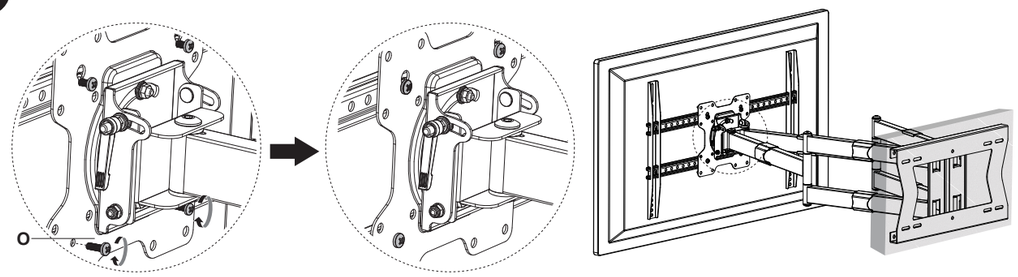

9

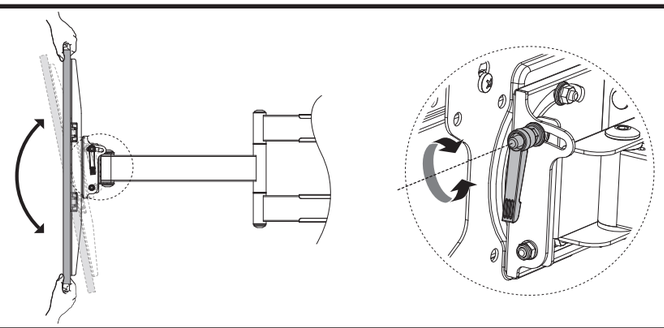

10

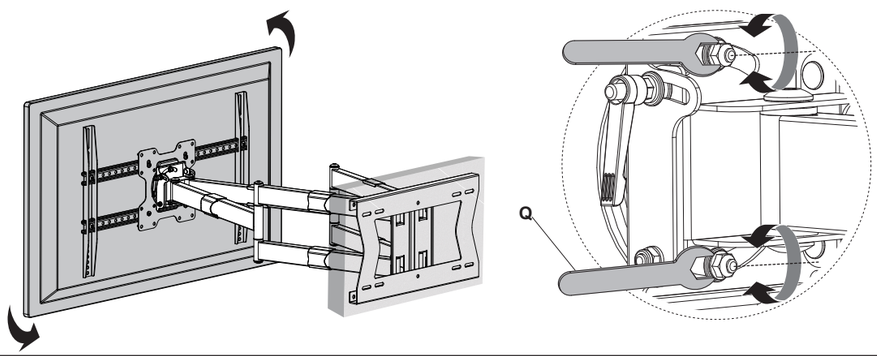

11

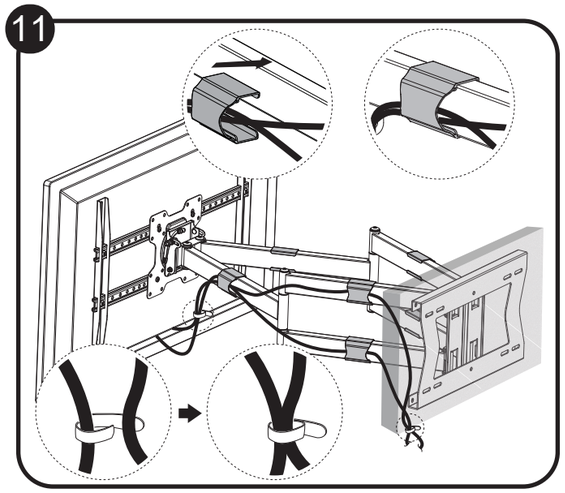

12

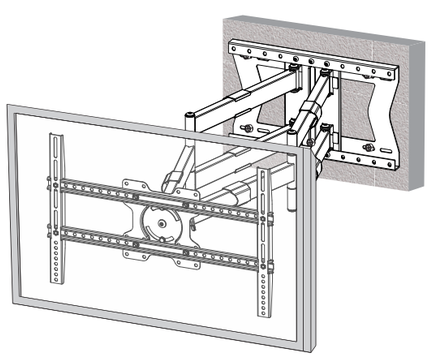

LED/LCD/Plasma Wall Support

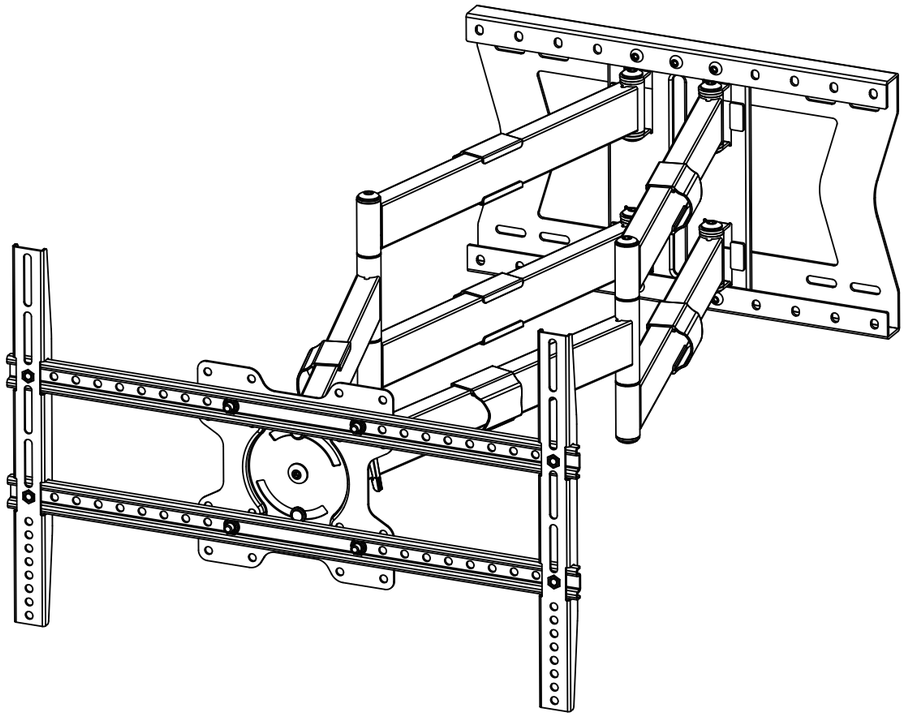

LA2060-600

MOUNTING INSTRUCTIONS