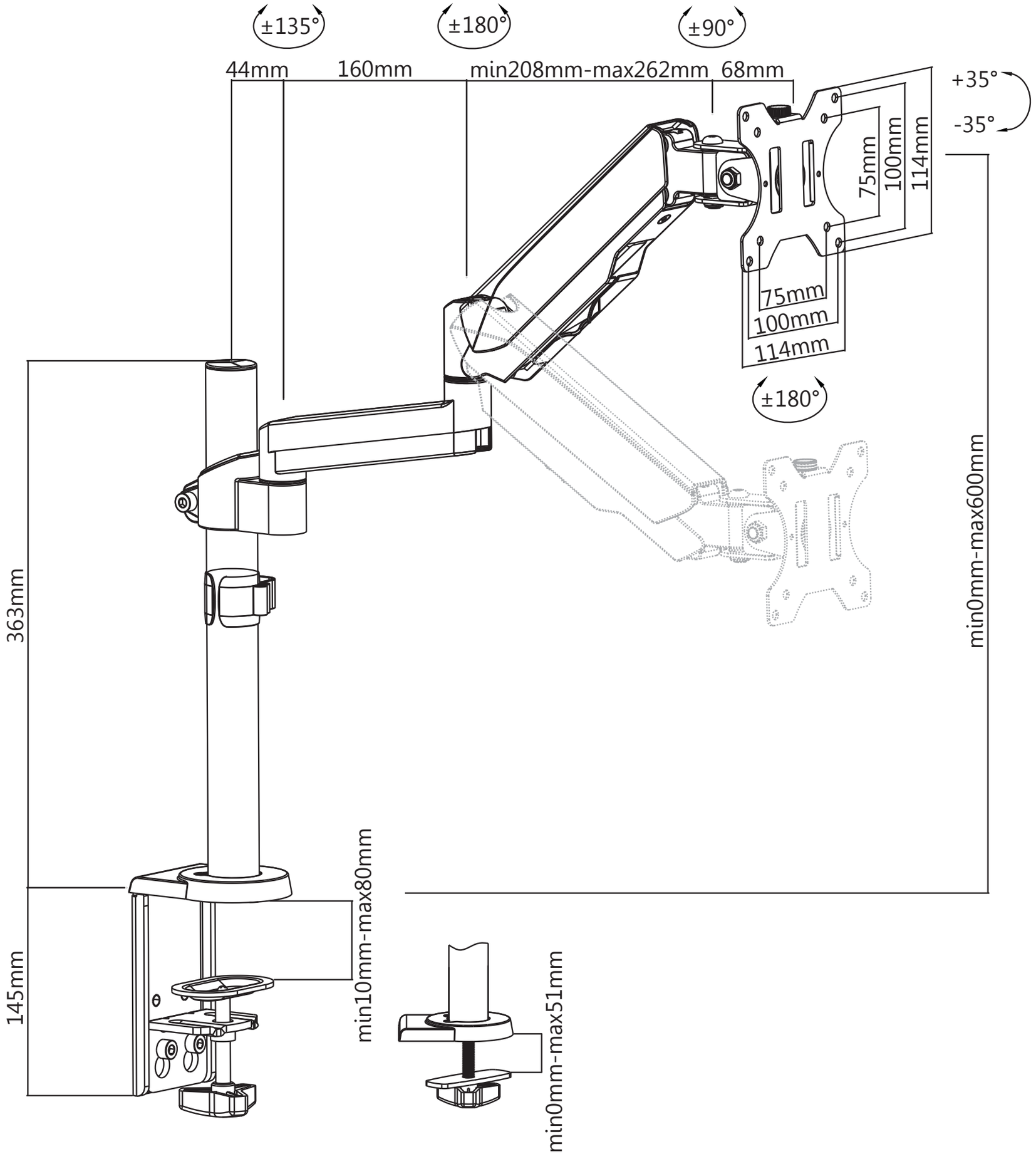
±135°
±180°
±90°
44mm
160mm
min208mm-max262mm
68mm
+35°
-35°
75mm
100mm
114mm
75mm
100mm
114mm
±180°
363mm
min0mm-max600mm
145mm
min10mm-max80mm
min0mm-max51mm